IF DERIVED AGC V2 Page 75 (with vk3pe mods.)

160418

BOB SKELTON BOOK P75 WITH AGC CHNAGE BY VK3PE

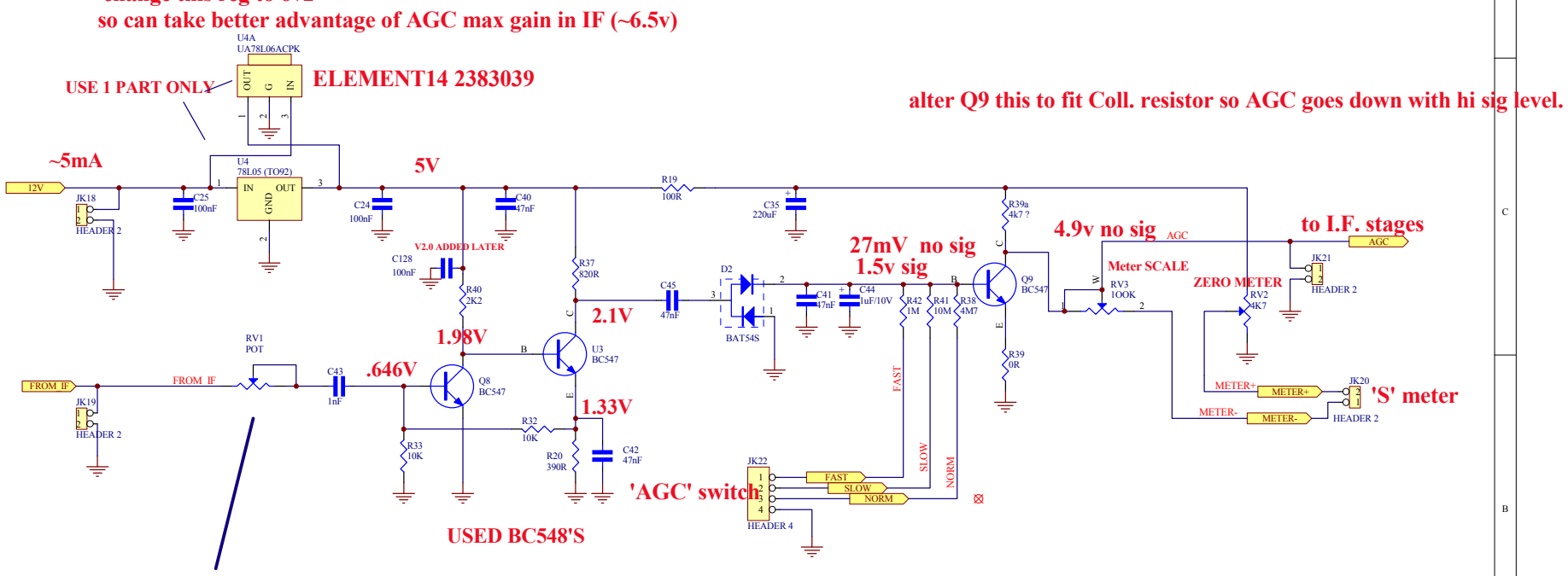

NOTE: IF POT IS TURNED TOWARDS MIN VALUE THEN THIS
CICRUIT MAY
OSCILLATE at ABOUT 450KHz

VOLTAGES WERE MEASURED ON THE v1 BOARD.

IF_DERIVED_AGC_1.PCB

V2.0 FIX POT TRACK

NOW V2 CHANGED AGC OUT TO AN NPN WAS FET. ALTERED RESISTORS
HAND MADE VERSION USED 5V REG. SEE V2
FOR 6V2 REG

MARCH 21ST 2018